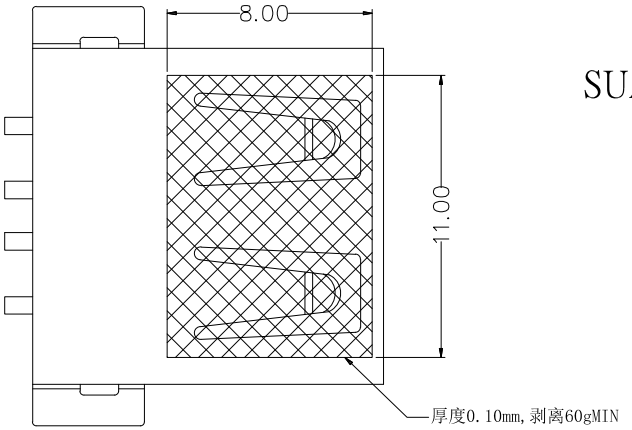

SUA-110M15-x-x-S175

COLOR :

Black : B
White : W
Blue : BL

鍍層厚度 :

Blank : 1u"
2 : 15u"
3 : 30u"

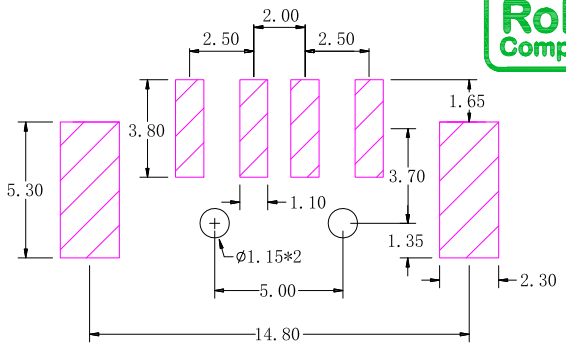

PCB LAYOUT MOUNTING PATTERN

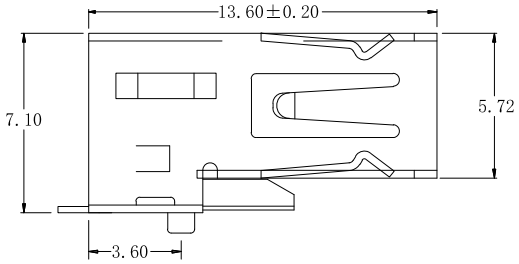

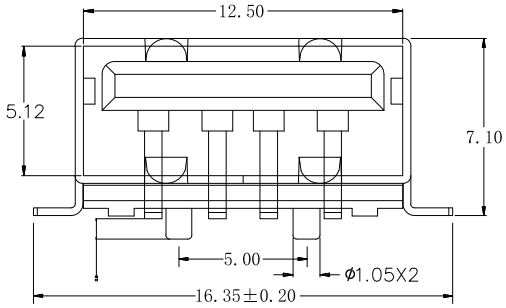

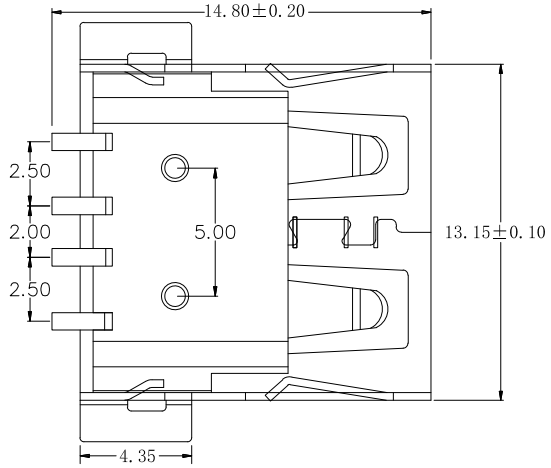

SPECIFICATIONS

Electrical:

1.Current Rating: 1.5A / contact terminal

2.Voltage Rating: 30V DC

3.Contact Resistance: 30 mΩ Max

4.Dielectric Withstanding Voltage: 500 V AC AT Sec Level

5.Insulation Resistance: 1000 MΩ Min

Material:

1.Housing: LCP , Black

2.Contact: BRASS

3.Shell: BRASS

Finish:

1.Contact: Plated Gold in Mating Area ;
Tin Plated on Solder Balls
Nickel under plated overall

2.Shell: Nickel under Plated surface layer

ITEM NO.	DESCRIPTION	DRAWN	DATE
4	更新圖面	Jack	090823
3	新增平整度標示	Jack	033021
2	更新材質	Jack	060917
1	更新鍍層及材質	Jack	032014

東莞市高迪電子有限公司
DONG GUAN GAO DI ELECTRONICS CO., LTD

TOLERANCE UNLESS OTHERWISE STATED : Up to 5 ±0.2; Above 5 ~ 15 ±0.3; Above 15 ~ 30 ±0.4; Above 30 ~ 50 ±0.5; Angle ±0.3°

3RD. ANGEL'S

UNITS MM

DRAWN BY: Jack Lu	DATE 09/08/23	MAT'L	
CHECKED BY: Jacky Chen	DATE 09/08/23	FINISH	
APPROVED BY: Tony Kao	DATE 09/08/23	SCALE 1 : 1	SHEET NO. 1 of 1

TITLE	CONNECTOR		
MODLE	USB AF SMT 平口 1.0 柱		
DWG NO.	SUA-110M15-x-x-S175	SIZE	A4
PART NO.	SUA-110M15-x-x-S175	VER	R4